Dimension Drawing - SmartBatterySense	
SBS050100200	Smart Battery Sense

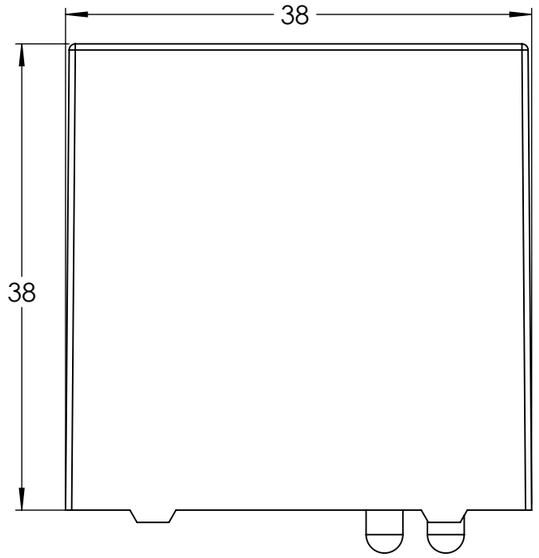

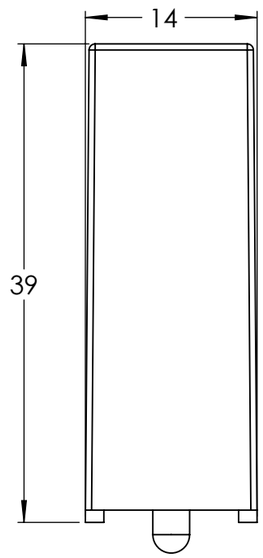

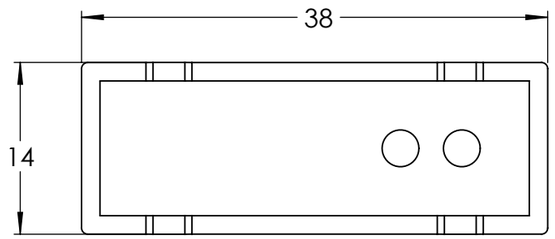

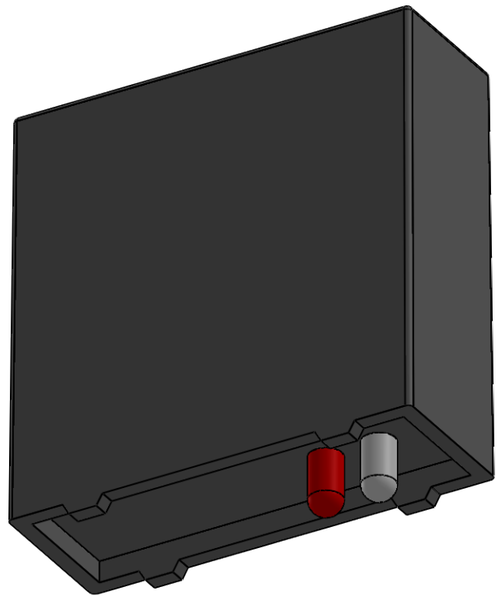

Dimensions in mm

victron energy
BLUE POWER

Dimension Drawing - Smart BatterySense	
SBS050150200	Smart BatterySense

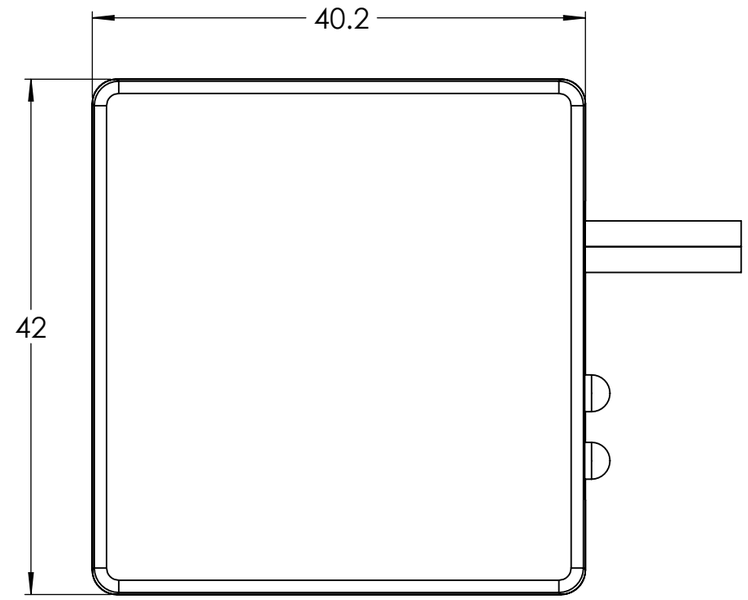

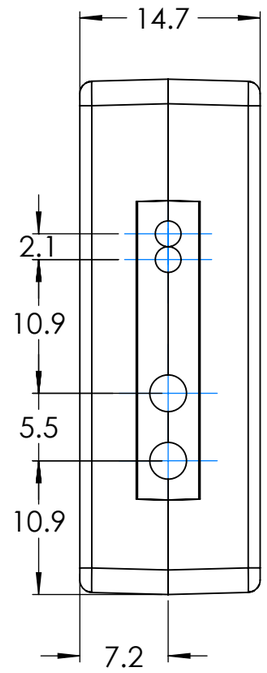

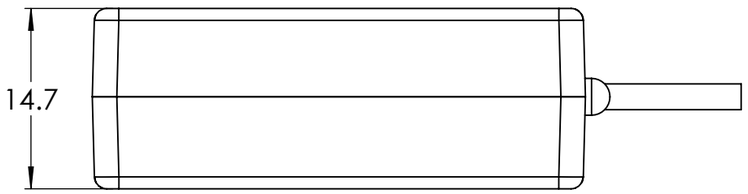

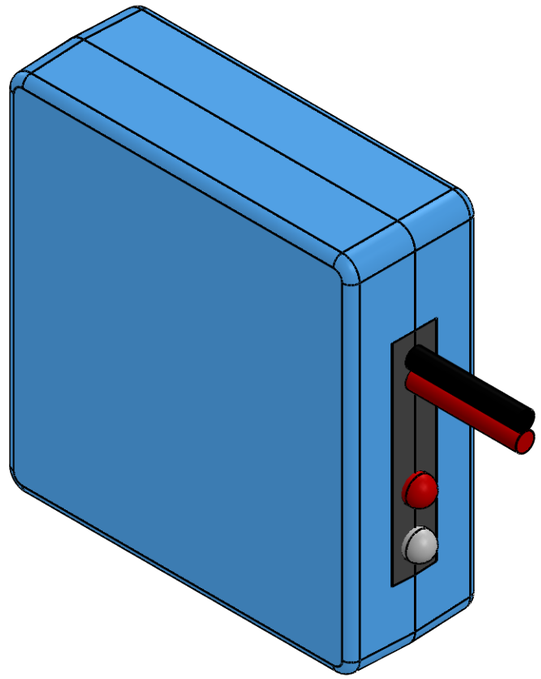

Dimensions in mm

victron energy
BLUE POWER

Learn more about RV batteries we have.