BROAN®

Under-Cabinet

Quality construction and ease of installation make the BUEZ2 a popular choice in vertically-ducted economy hoods.

SIZE	WHITE ON WHITE	BLACK	STAINLESS STEEL	NON-DUCT FILTER (replacement)
30-in.	BUEZ230WW	BUEZ230BL	BUEZ230SS	97006931
36-in.	BUEZ236WW			97006931

HVI PERFORMANCE				
Duct Orientation	**Size**	**Damper**	**Sones High**	**CFM High 0.1 in. w.g.**
Vertical - Round	7-in.	BP87Q (purchase separately)	6.0	190

FEATURES	
Max. Blower CFM*	230
Control type	2-speed Rocker
Lighting	1-level Rocker 1- 75W, A19 incandescent bulb (purchase separately)
Fan Blade & Light Lens	Polymeric
Grease Filter	1- Washable aluminum 8-3/4" x 10-1/2"
Installation Hardware	EZ1 brackets
ADA Compatible	yes
AC INPUT	
120V, 60 Hz - 2.0 AMPS	
OPTIONAL ACCESSORIES	
ADA Wiring Kit	HAWRK3
MOUNTING HEIGHT	
18-in. to 24-in. from cooktop to bottom of hood	
LIMITED WARRANTY	
1-year	
FOR INDOOR USE ONLY	

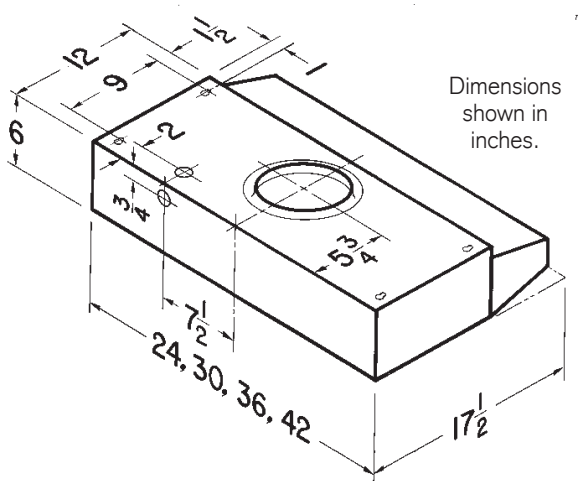

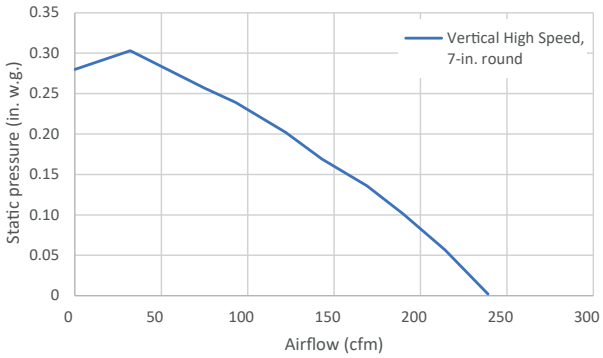

Can be used to comply with LEED requirements.

HVI-2100 CERTIFIED RATINGS comply with new testing technologies and procedures prescribed by the Home Ventilating Institute, for off-the-shelf products, as they are available to consumers. Product performance is rated at 0.1 in. static pressure, based on tests conducted in a state-of-the-art test laboratory. Sones are a measure of humanly-perceived loudness, based on laboratory measurements.

* Max. blower CFM indicates the performance of the hood blower in open air.

BUEZ2 SERIES