BROAN®

SPECIFICATION SHEET

43000 SERIES RANGE HOOD

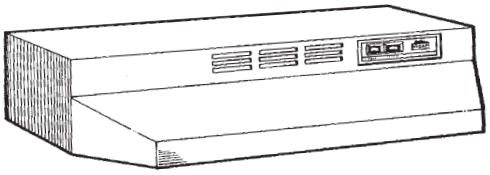

Choose this 4-way convertible hood for round and rectangular ducted, as well as non-ducted configurations.

FEATURES

- 4-way convertible - can be ducted using 7” round or 3¼” x 10” steel ductwork or installed non-ducted
- Includes 3¼” x 10” damper (7” round – purchase Model BP87Q damper)
- Max blower airflow: 260†
- 115 V, 60 Hz, 1.8 Amps
- Includes washable aluminum filter with light lens (non-ducted filter purchased separately)
- Two-speed rocker switch controls fan
- 75-Watt maximum incandescent light controlled by single rocker switch
- Finished with durable, environmentally friendly, advanced technology powder coating
- All edges hemmed for safety and strength
- Available in 30” and 36” widths in White-on-White, Black-on-Black, Biscuit-on-Biscuit, and Stainless Steel finishes

HVI-2100 CERTIFIED RATINGS comply with new testing technologies and procedures prescribed by the Home Ventilating Institute, for off-the-shelf products, as they are available to consumers. Product performance is rated at 0.1 in. static pressure, based on tests conducted in a state-of-the-art test laboratory. Sones are a measure of humanly-perceived loudness, based on laboratory measurements.

† Where noted performance rating is not HVI certified but was established in accordance with HVI Standardized test procedure.

TYPICAL SPECIFICATION

The range hood shall be a Broan 43000 Series.

Hood to be 30” (36”) in width and finished with White (Black) (Biscuit) powder-coat or constructed of stainless steel. All exposed edges to be hemmed.

Range hood will be convertible between 7” round, 3¼” x 10” rectangular (vertical or horizontal), and non-ducted discharges. A 3¼” x 10” damper to be included.

Hood shall have a washable aluminum filter and covered light. Incandescent light bulb to be 75 watts maximum.

Range hood to be controlled with two-speed rocker switch for fan and single rocker switch for light.

See below table for airflow and sound level performances.

Range hood shall be U.L. listed.

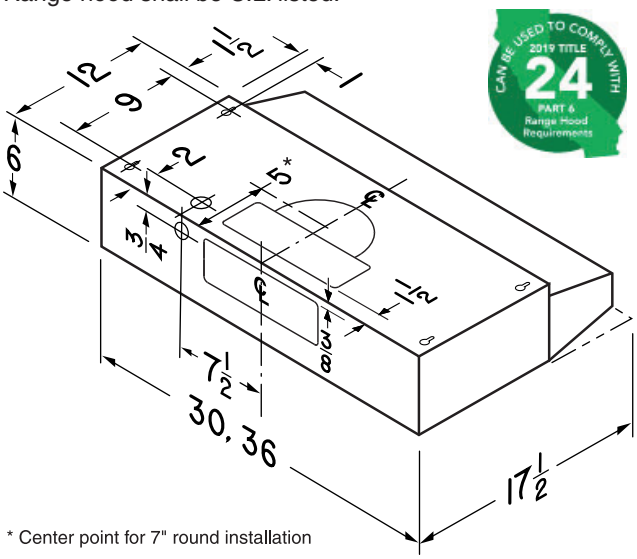

* Center point for 7" round installation

HVI PERFORMANCE							
Duct Orientation	Size	Damper	Sones		CFM		
			Normal	High	Normal	High 0.25 in. w.g.	High 0.1 in. w.g.
Vertical - Rectangular	3¼ in. x 10 in.	Included	2.0	6.0	100	105	190
Horizontal - Rectangular	3¼ in. x 10 in.	Included	2.0†	7.0	90†	105	160
Vertical - Round	7 in.	Sold separately	2.0	6.0	130	100	240

If you’re looking for quality home appliances, visit our website.